LAYER 1

- $\frac{3}{4}$" Plywood Breadsticks
- Larger circle radius = 1'-2 $\frac{3}{8}$"
- Smaller circle radius = 10 $\frac{5}{8}$"

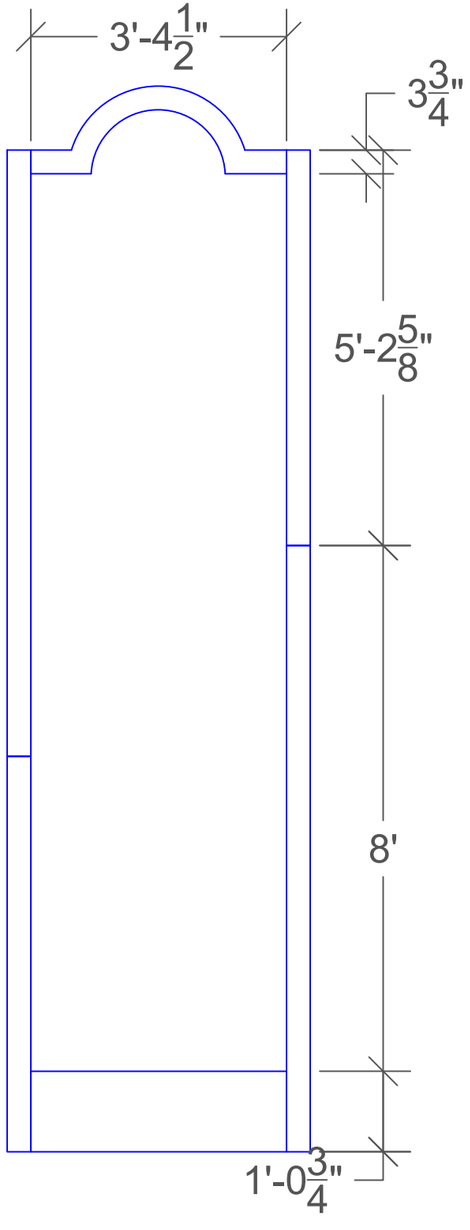

LAYER 2

- $\frac{3}{4}$" Plywood Breadsticks
- Larger circle radius = 1'-2 $\frac{3}{8}$"
- Smaller circle radius = 10 $\frac{5}{8}$"

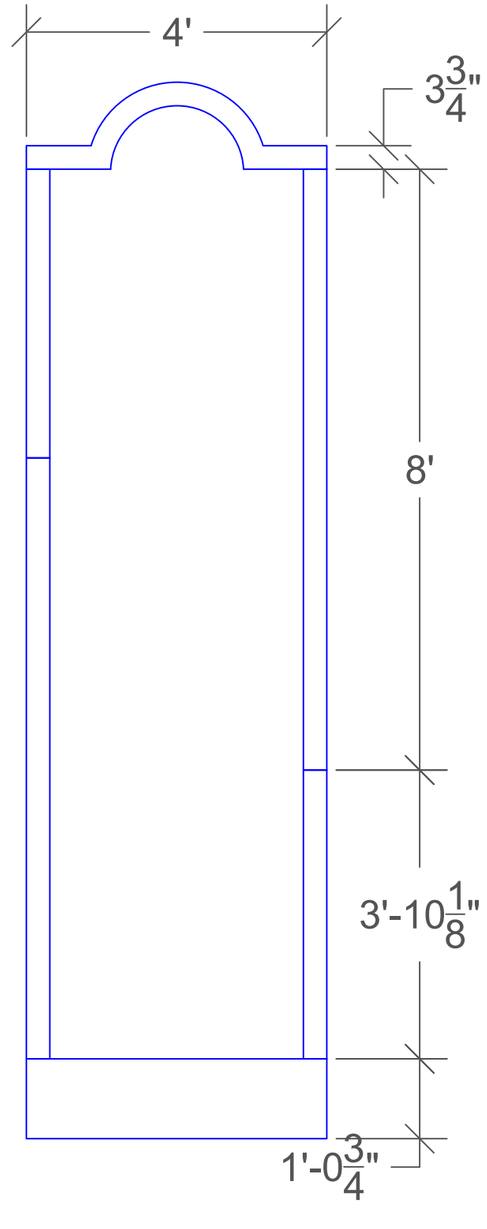

LAYER 3

- $\frac{3}{4}$" Plywood Breadsticks
- Larger circle radius = 1'-2 $\frac{3}{8}$"
- Smaller circle radius = 11 $\frac{3}{8}$"

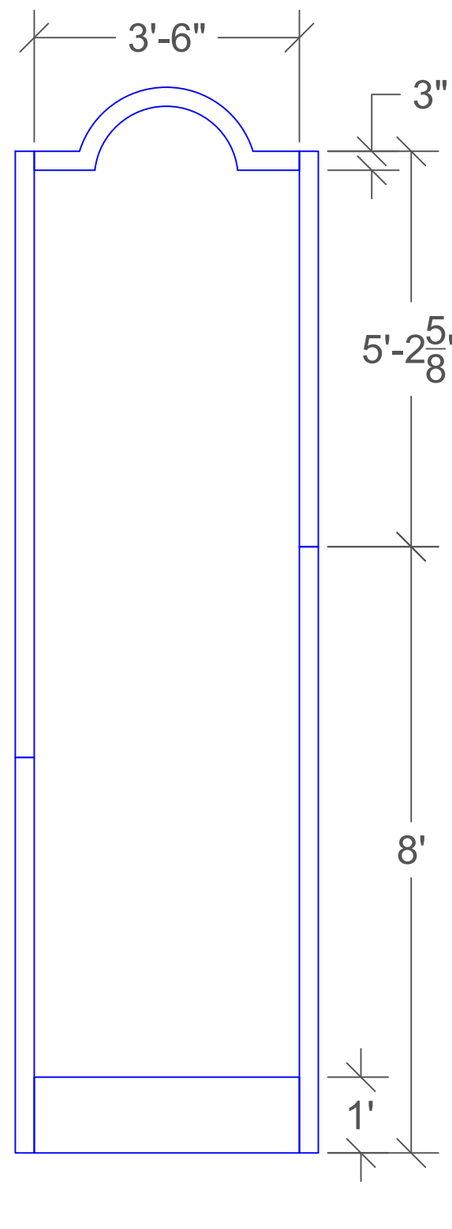

LAYER 4

- $\frac{3}{4}$" Plywood Breadsticks
- Larger circle radius = 1'-2 $\frac{3}{8}$"
- Smaller circle radius = 11 $\frac{3}{8}$"

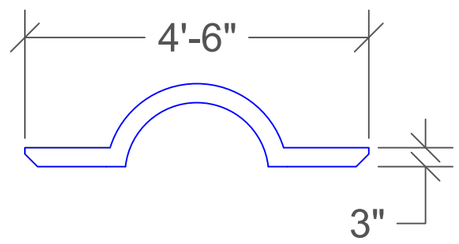

DATE: 03/29/2026 VERSION: 1

Imaginary Invalid Wall J

Northern Arizona University

SCENIC DESIGNER: David Castellano

TECHNICAL DIRECTOR: Nathan Repp

ATD: Melissa Anne Covert

MC: N/A

SHOP MANAGER: Nathan Repp

DATE UNIT STARTED:

UNIT COMPLETED BY:

DATE COMPLETED:

? OF ?