NOTES:

- Make 2
- Good side of plywood up

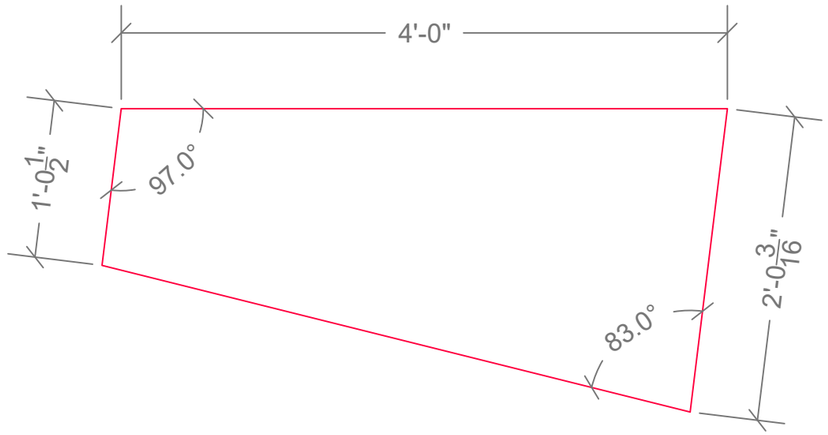

NOTES:

- Make 2
- Good side of plywood up

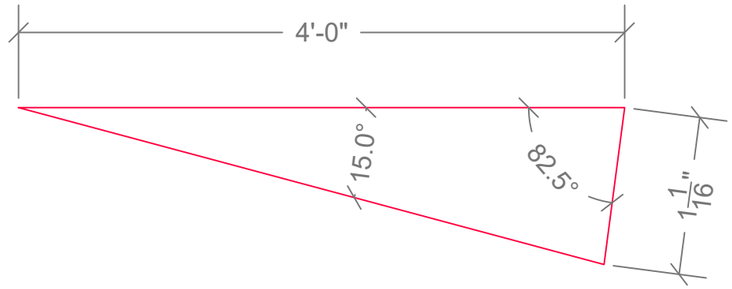

NOTES:

- Make 2
- Angles are on skin plate

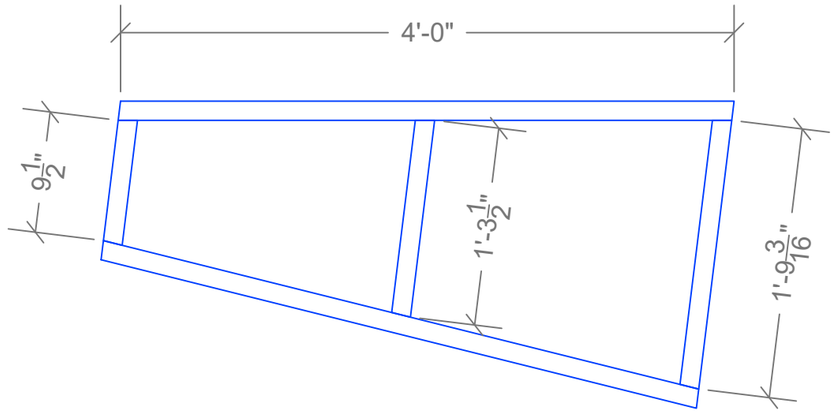

NOTES:

- Make 2
- Angles are on skin plate

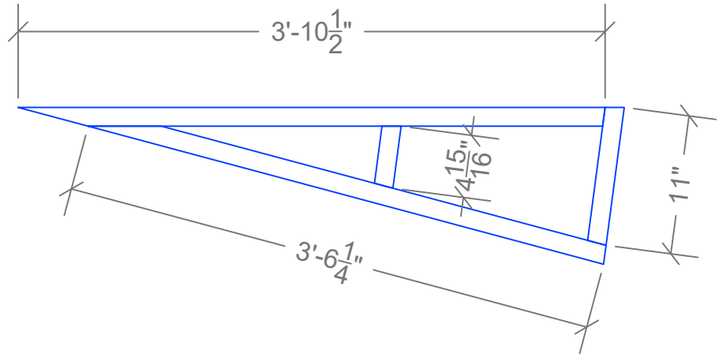

Northern Arizona University

ISM'S

DATE: 1/17/2026 VERSION: 1

RISER PLUGS

1 OF 2

TECHNICAL DIRECTOR: Nathan Repp

SCENIC DESIGNER: David Castellano

SHOP MANAGER: Nathan Repp

ATD: MELISSA ANNE COVERT

MC: N/A

DATE UNIT STARTED:

DATE COMPLETED:

UNIT COMPLETED BY: